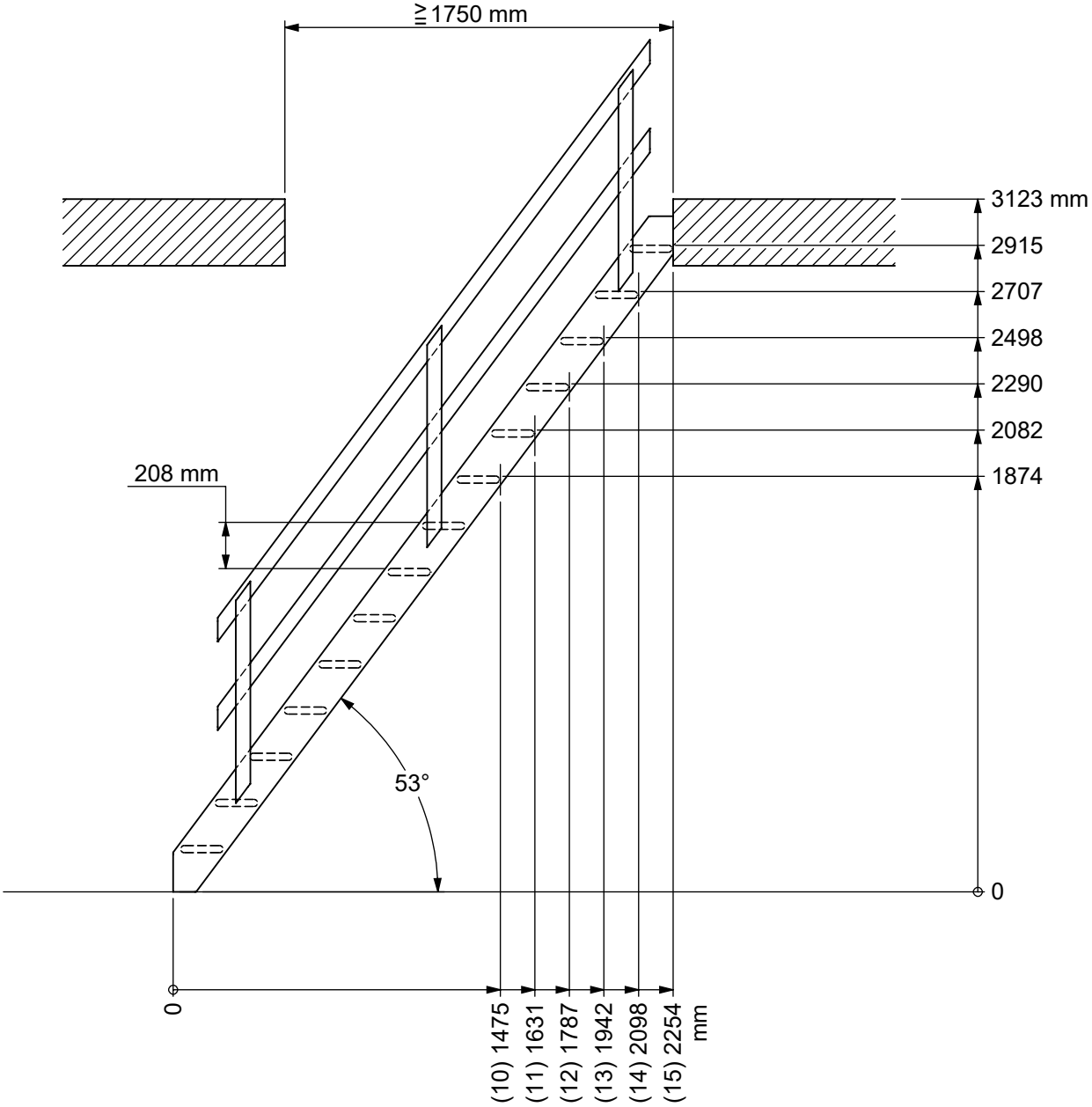
≧1750 mm
3123 mm
2915
2707
2498
2290
2082
1874
208 mm
53°
0
0
(10) 1475
(11) 1631
(12) 1787
(13) 1942
(14) 2098
(15) 2254
mm

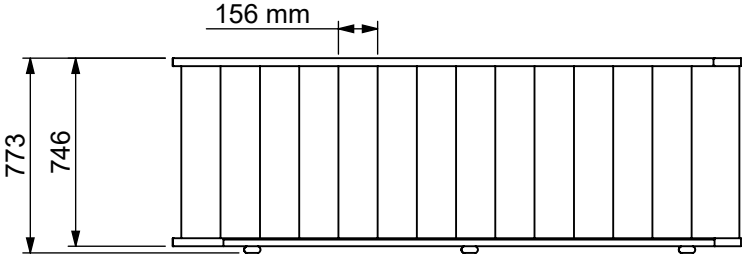
156 mm
773
746