ROME

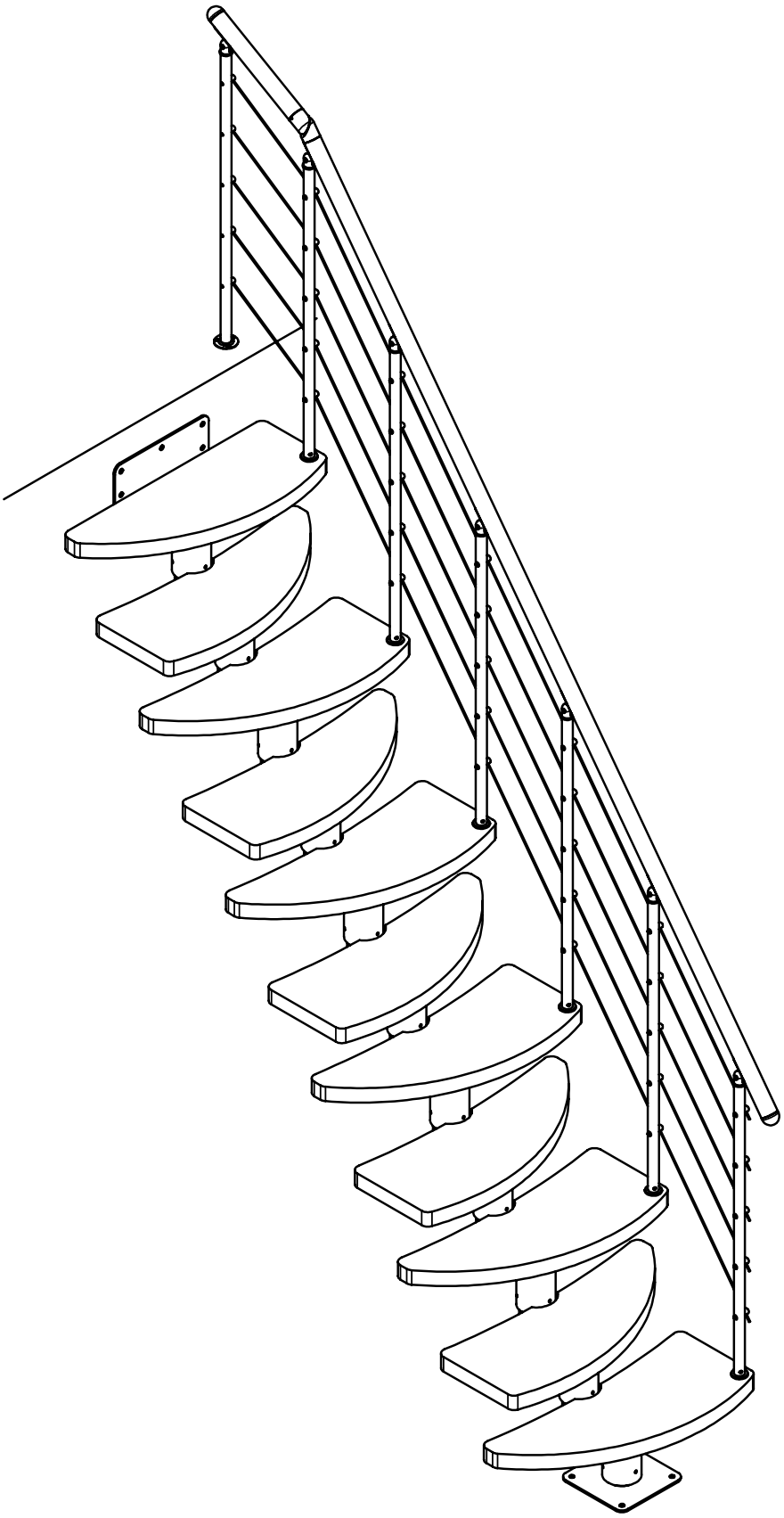

GB

Installation Guidelines - additional instructions

Preparation (A)

- Choose the required floor plan – see examples.
- Calculate the height of rise using the following formula: $\frac{\text{floor height}}{\text{number of steps + 1}} = \text{height of rise}$
- If the angle of two successive steps is greater than 20°, the steps may be turned the same way – see Figure (A2).

Assembly (Figure 1 - 14)

NB! The staircase should be assembled from the TOP DOWNWARDS.

- Start assembling the staircase – begin with figure (1).
- REMEMBER to check the height of rise for every step.
- REMEMBER to use support once the first four elements have been assembled – see Figure (3).

Figure (4): Assemble the last two elements as shown in the figure BEFORE installing them – but DO NOT tighten.
Next, insert in the correct place and adjust the height of rise.

Figure (7): Installing the steps:
Turn the wide side of the top step towards the handrail. Next, install the steps working downwards, alternating right and left.

NB! It is easier to pre-drill the steps for the railing prior to installation.
Use the enclosed template - at page 10.
Place the steps in the middle of the support, check distance (X) – see Figure (7) and distance (Y) – see Figure (8).

NB! If the angle of two successive steps is greater than 20°, the steps may be turned the same way – see Figure (A2) at page 5.

Figure (9–13), (14):
Installing the handrail:
Start at the top step and affix the railing to every second step.
Attach the landing rail to the floor, then fit the handrail and finally the steel wire – see Figure (14).

NB! You must install the ENTIRE handrail BEFORE tightening the steel wire.

① 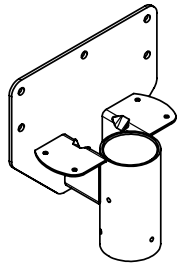 × 1 K2-29240	② 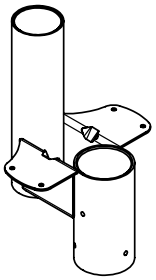 × 9 K2-29230	③ 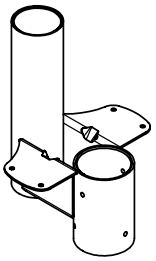 × 1 K2-29270	④ 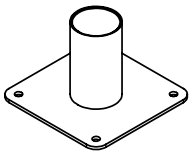 × 1 K2-29250

⑤ 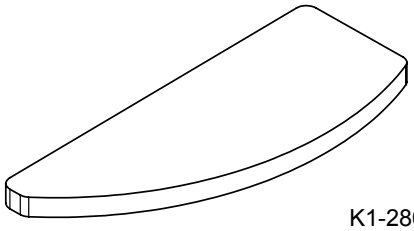 × 1 K1-28010	⑦ 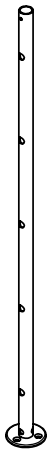 × 1 K2-29281	⑧ × 6 K2-29280	⑨ × 7 K1-29204	⑩ × 7 K1-12207	⑪ × 2 K2-01020
⑥ 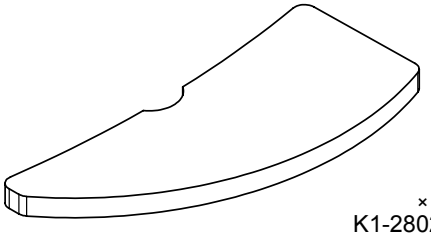 × 10 K1-28020			⑫ × 6 K2-01010	⑬ × 1 K1-01620	⑭ 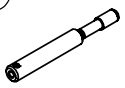 × 10 K2-04200
			⑮ × 35 k1-04041	⑯ 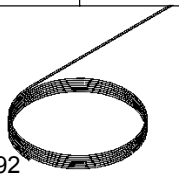 18 m K1-23292	

⑰ 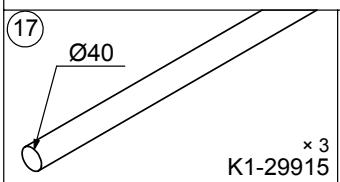 Ø40 × 3 K1-29915	

㊵ × 9 K3-08004 *Ø10×60*	㊶ × 9 K3-04028 *Ø8*	㊷ × 9 K3-06015 *Ø8×70*	㊸ × 55 K3-05003 *M8×6*	㊹ × 44 K3-06030 *Ø6×30*	㊺ × 3 K3-08002 *Ø8×40*	㊻ × 3 K3-06022 *Ø5×35*	㊼ × 7 K3-05060 *M6×8*
㊽ × 7 K3-01002 *M5×18*	㊾ × 7 K3-03020 *M5*	㊿ × 14 K3-06018 *Ø4×25*	(51) × 6 K3-07008 *M10×70*	(52) × 6 K3-04030 *Ø10*	(53) 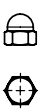 × 6 K3-03010 *M10*	(54) × 35 K1-04040 *M6×18*	(55) × 14 K3-06064 *Ø4×25*

GB

Please note that impurities may occur in the threads of the components. We have enclosed a screw tap for correction of this.

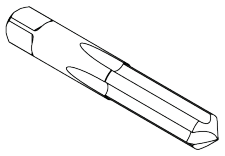

x 1
K3 10010

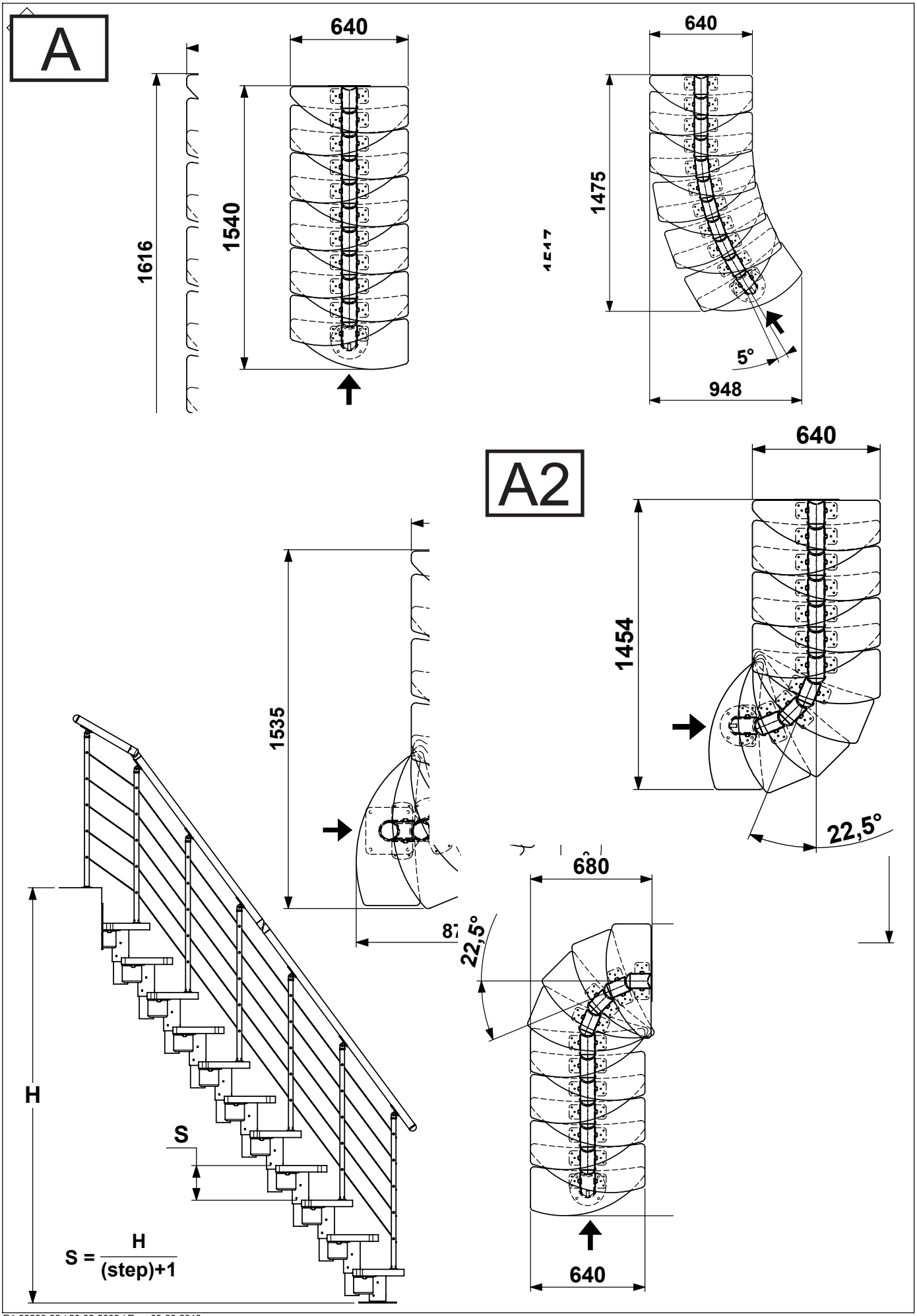
A
640
1616
1540
640
1475
5°
948
A2
640
1454
22,5°
1535
680
22,5°
640
H
S
S = H / (step)+1

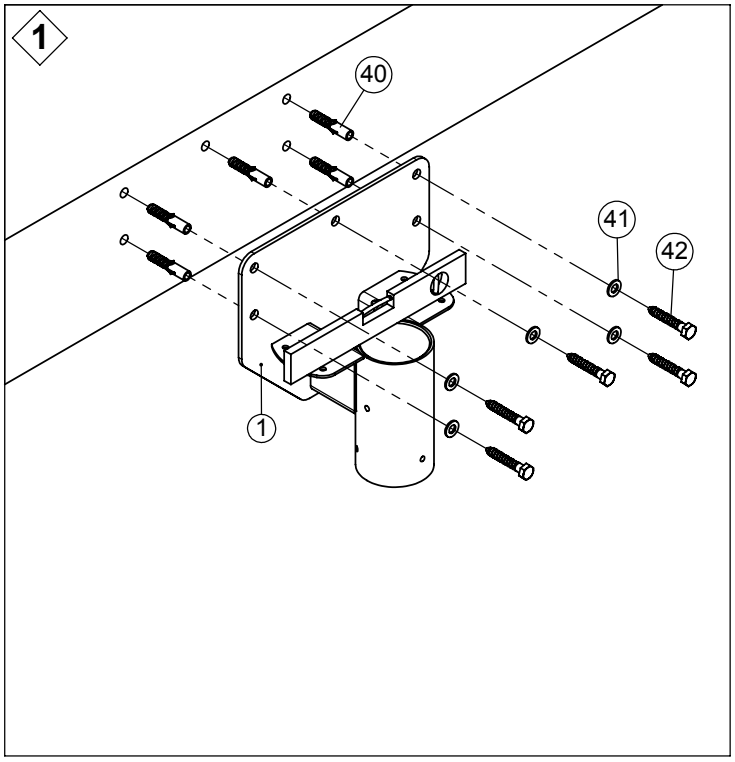

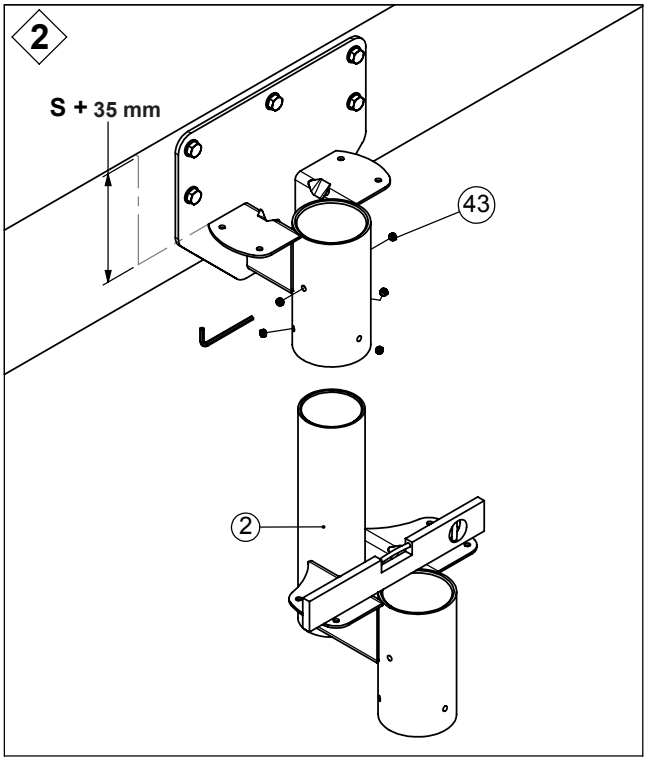

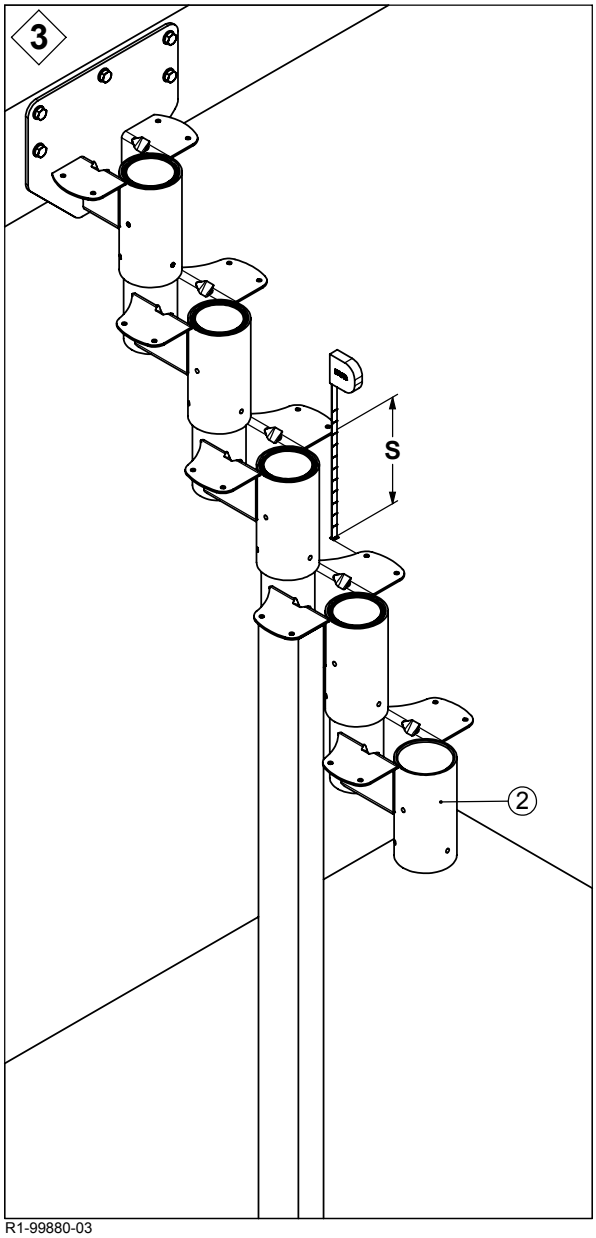

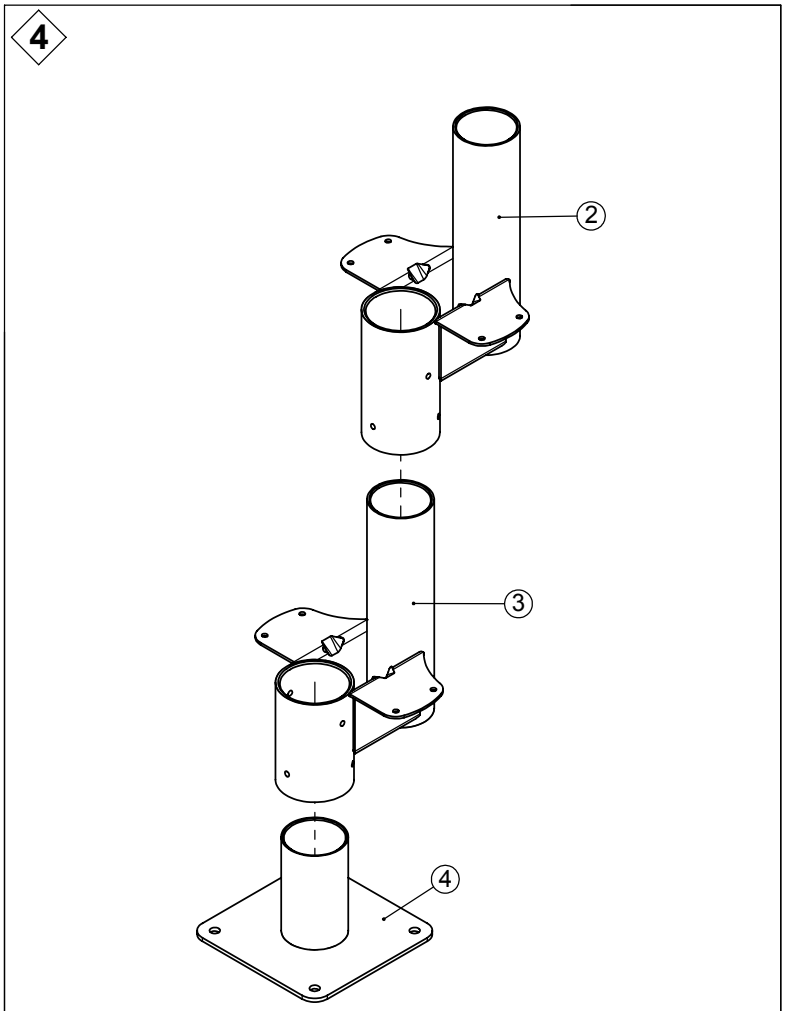

R1-99880-03

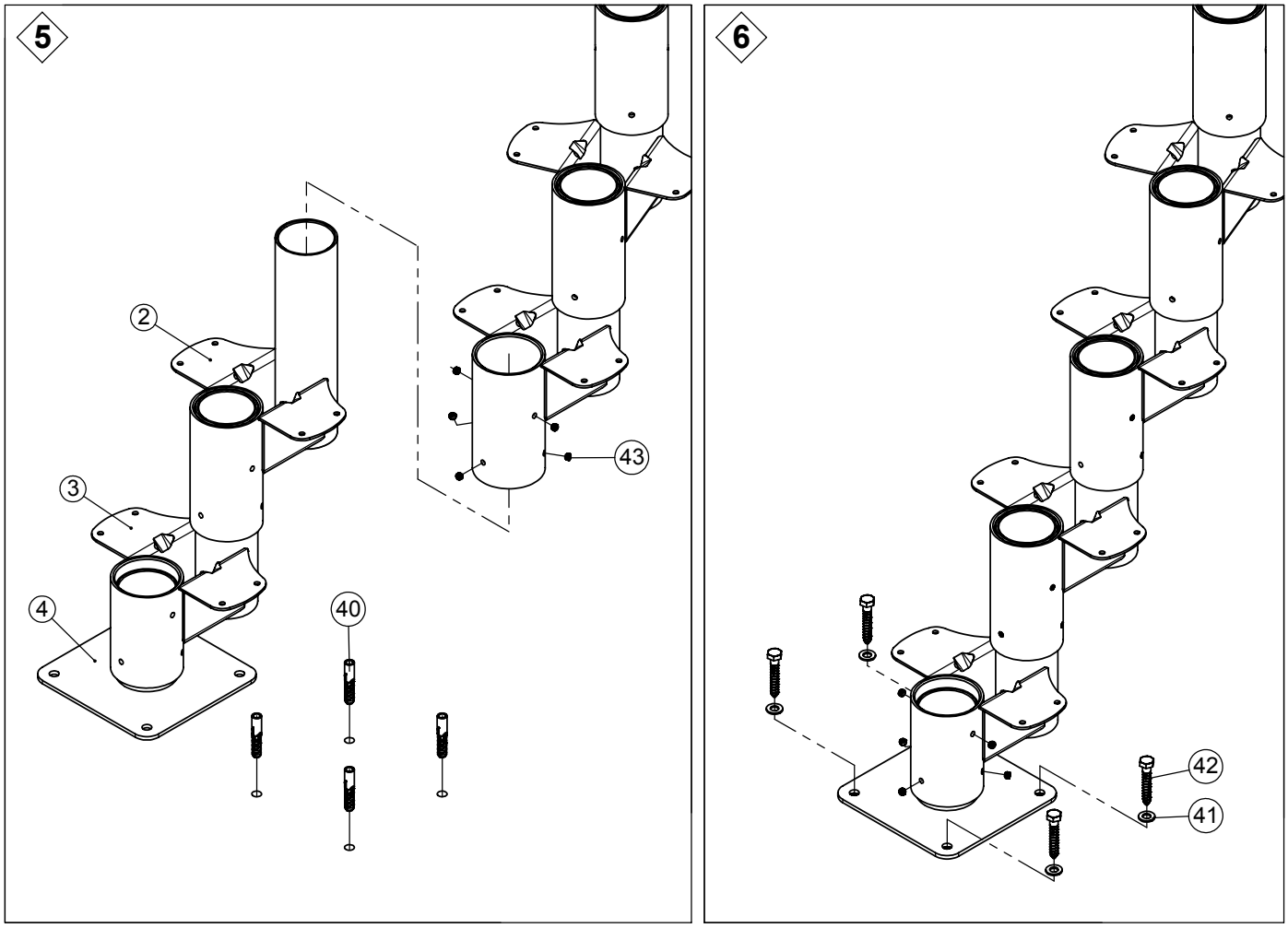

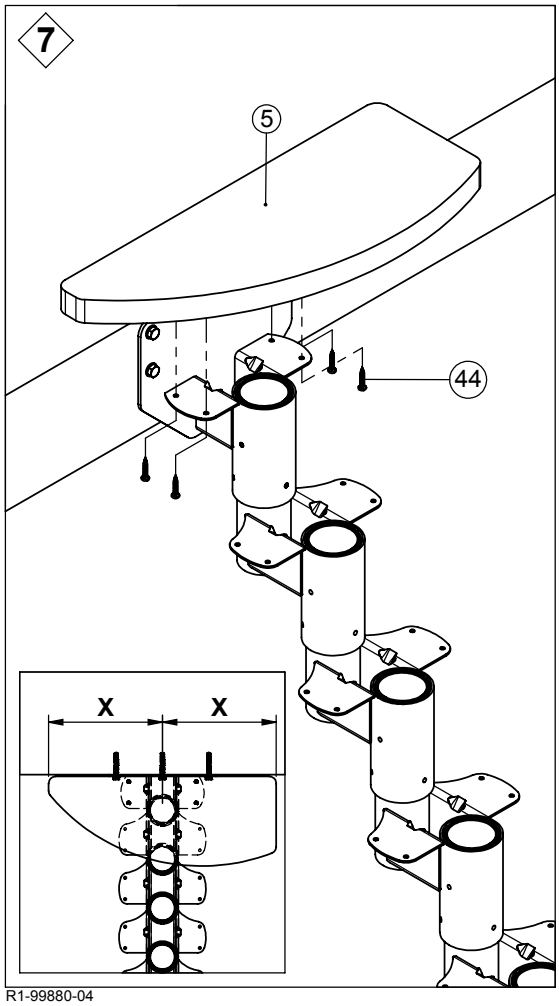

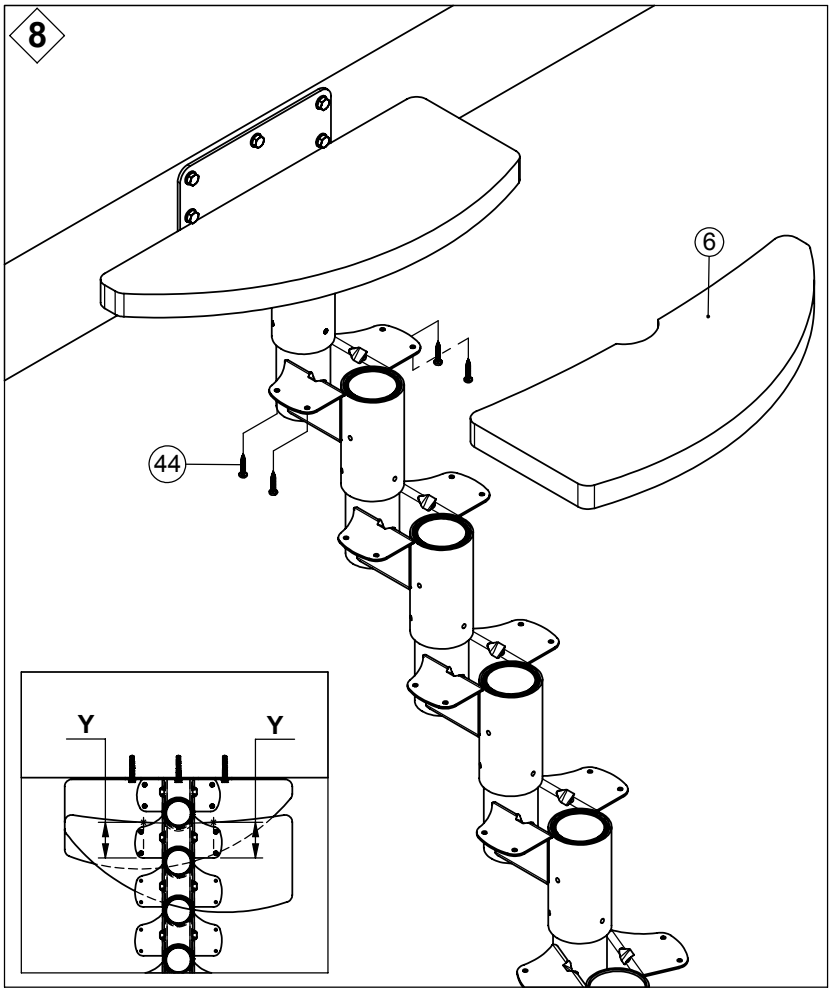

R1-99880-04

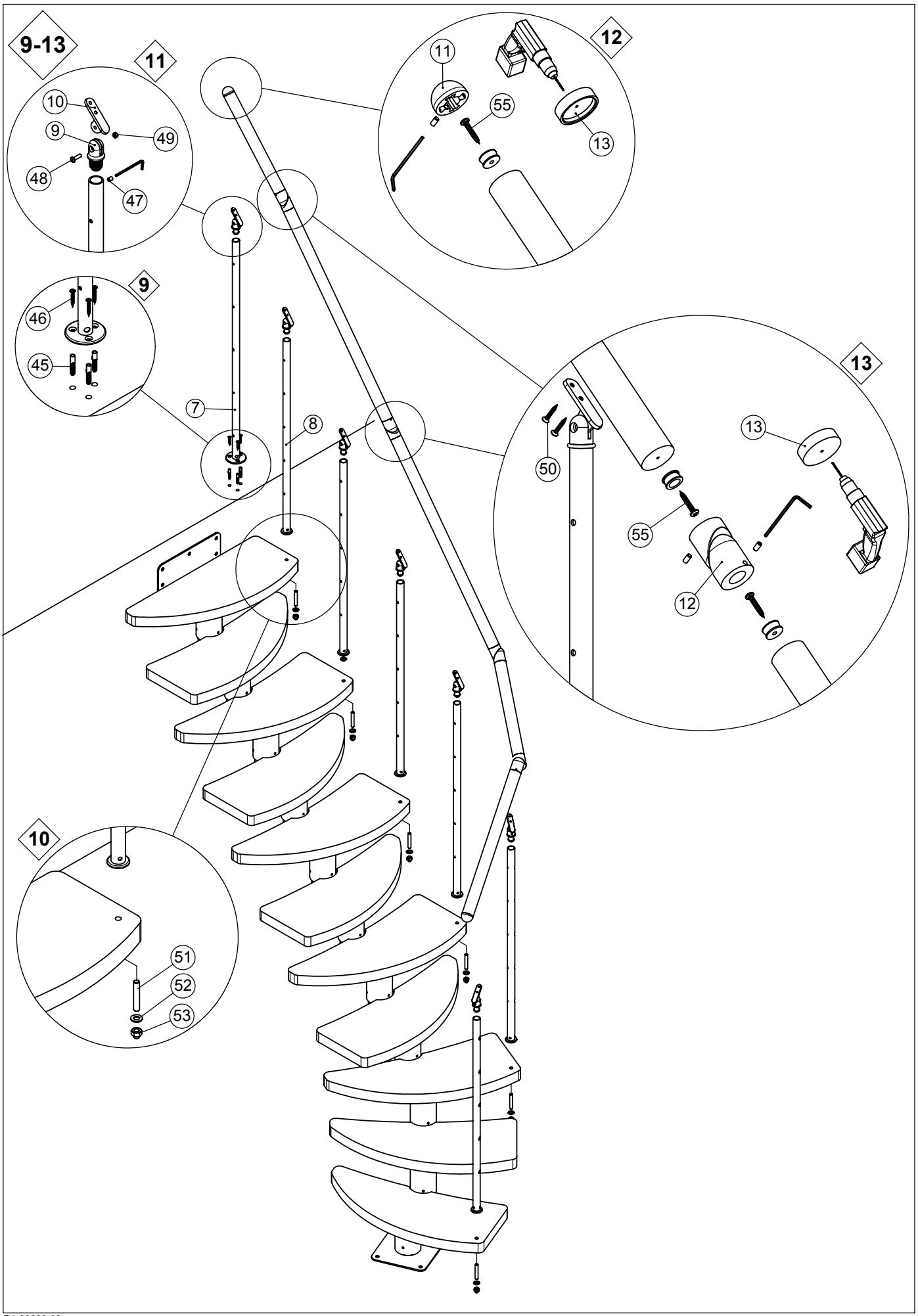
9-13
11
10
9
49
48
47
12
11
55
13
9
46
45
7
8
13
50
13
55
12
10
51
52
53

14

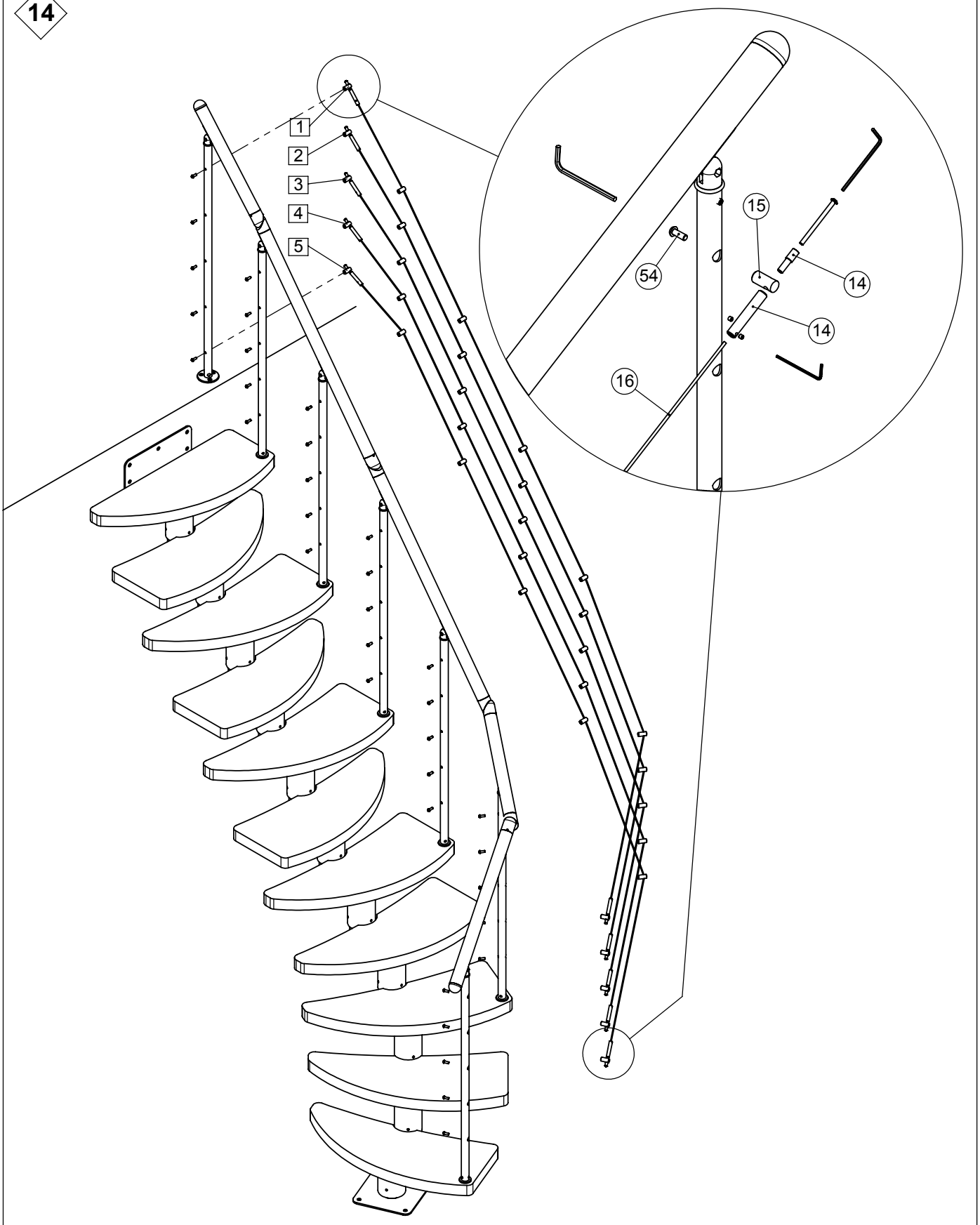

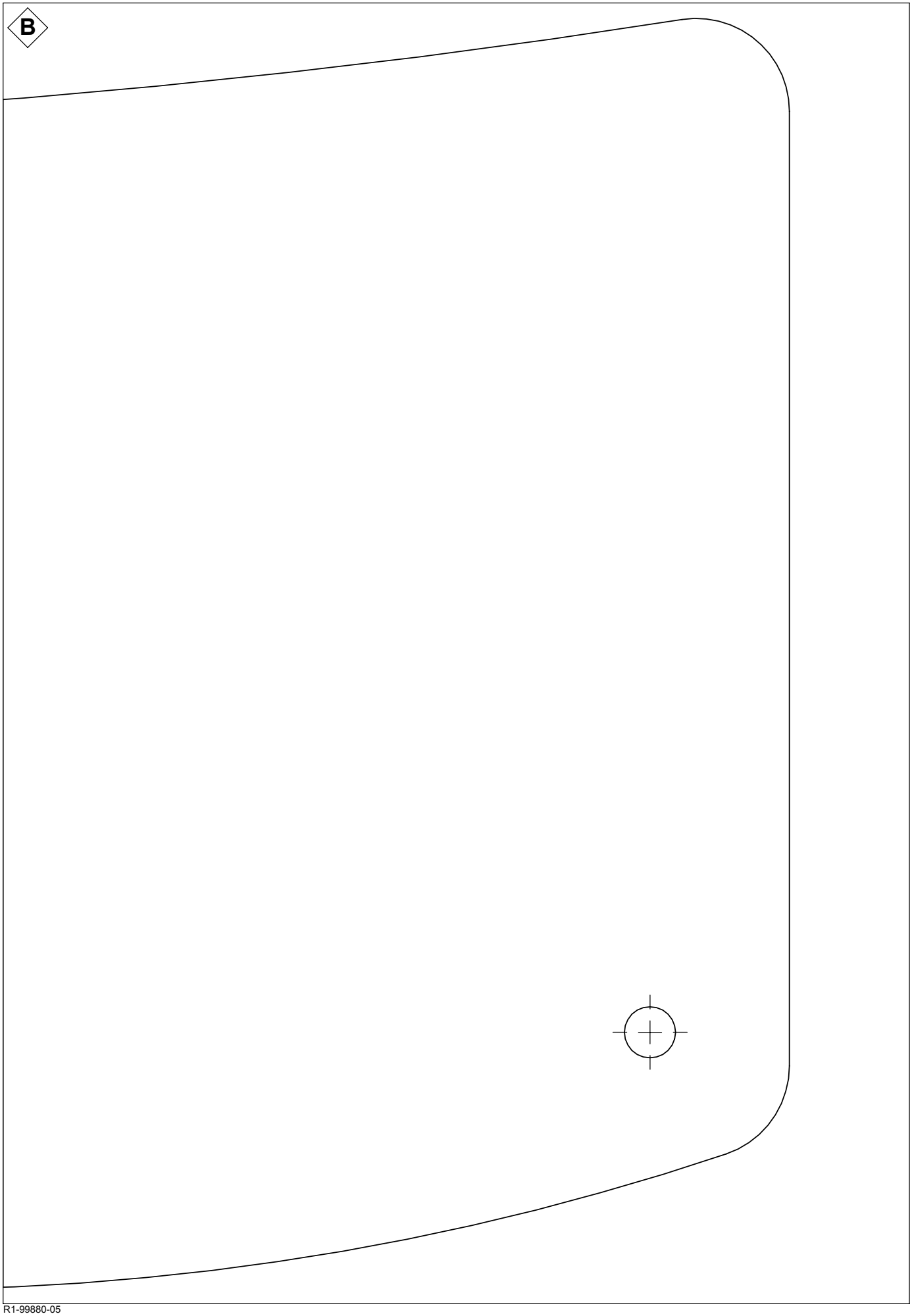
B