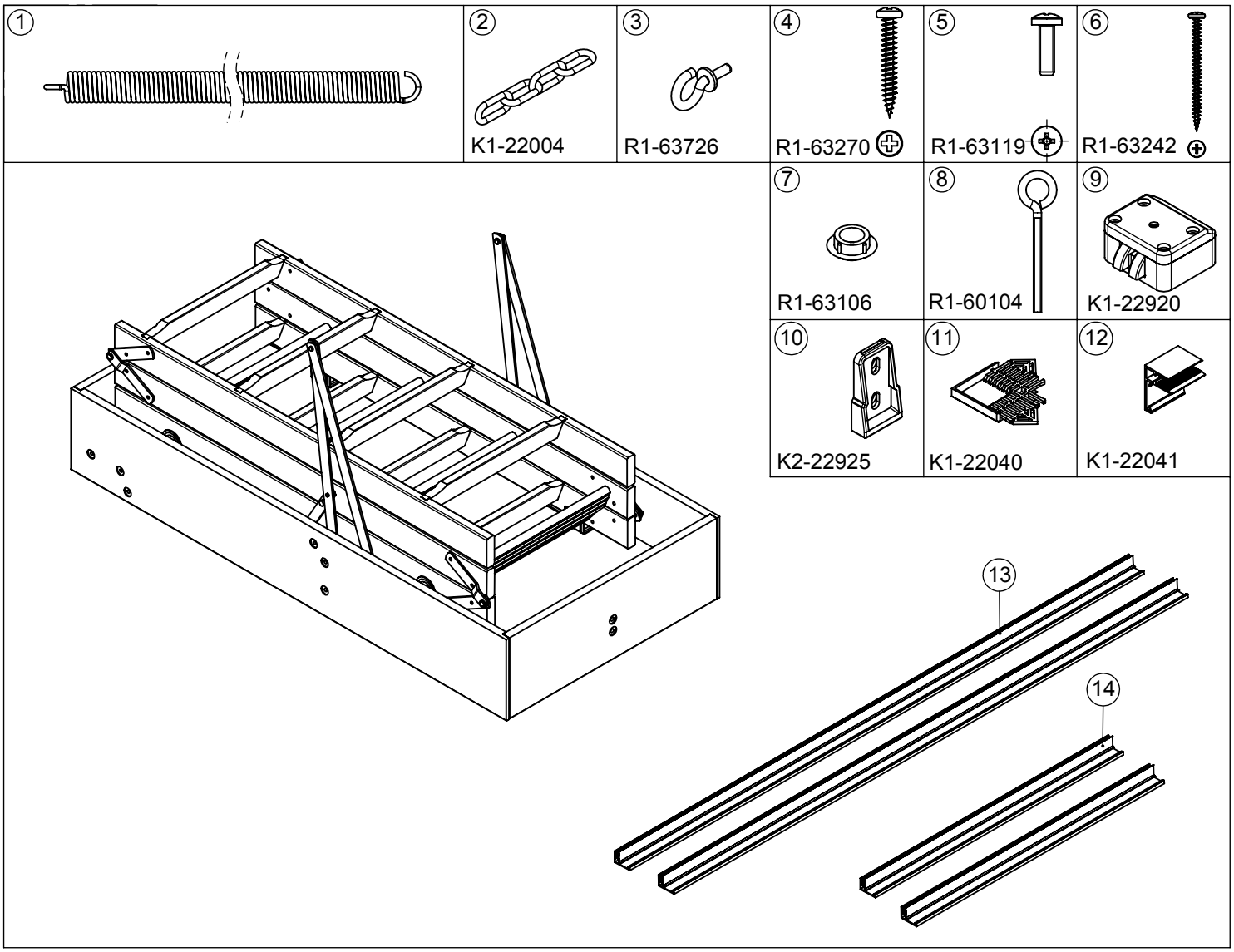
1
2
K1-22004
3
R1-63726
4
R1-63270
5
R1-63119
6
R1-63242
7
R1-63106
8
R1-60104
9
K1-22920
10
K2-22925
11
K1-22040
12
K1-22041
13
14

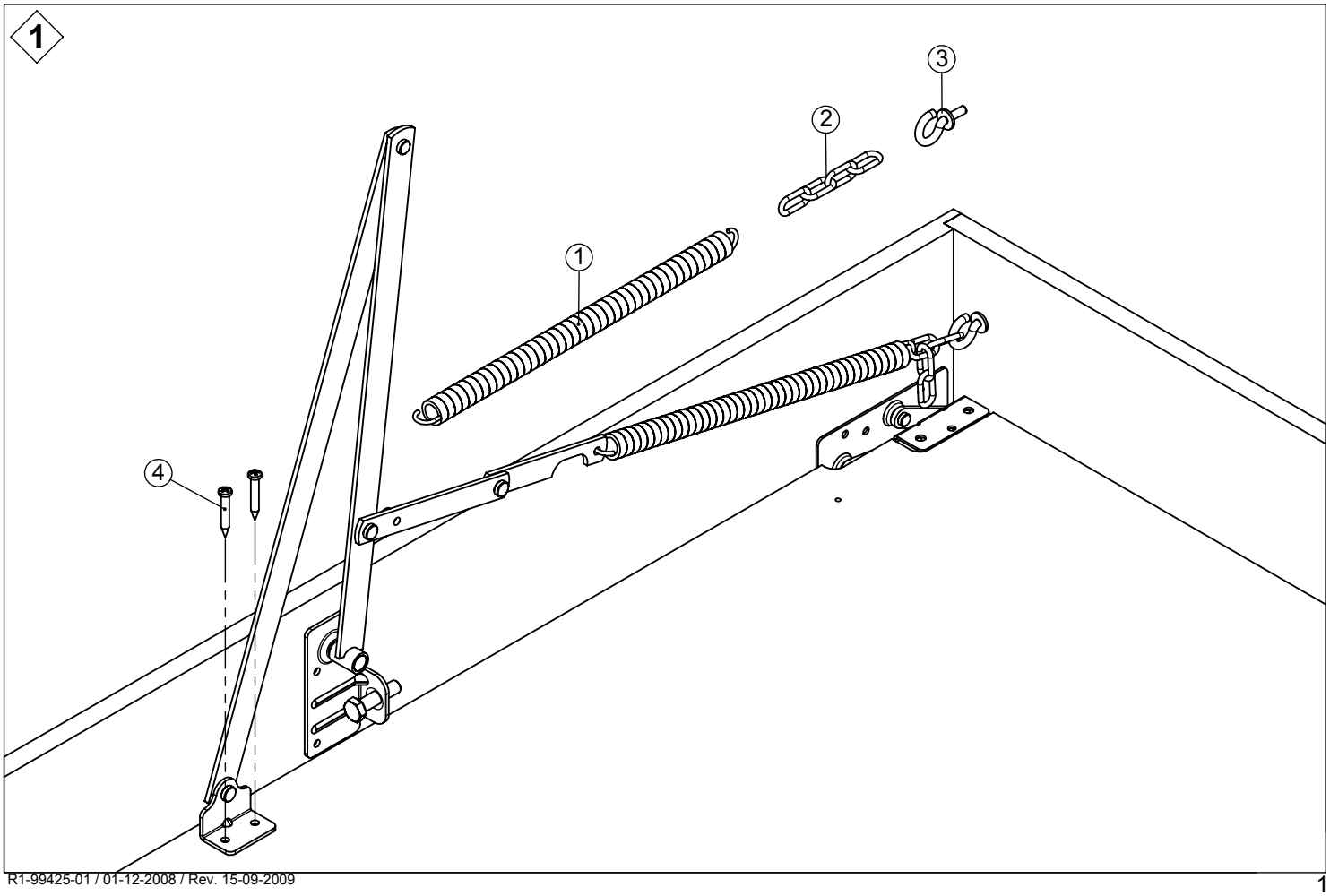
1
1
2
3
4

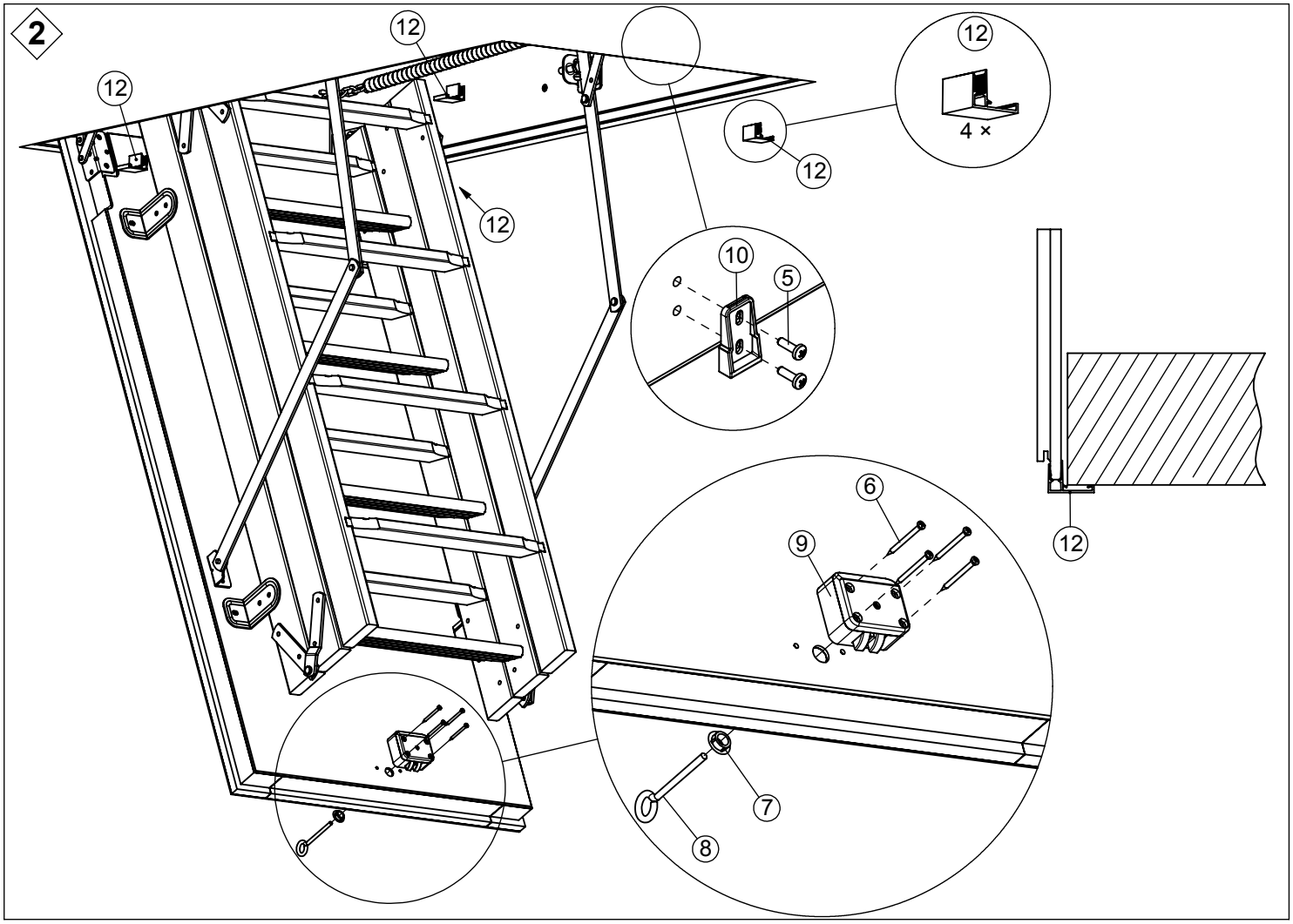
2
12
12
12
12
12
4 ×
12
10
5
6
9
12
7
8

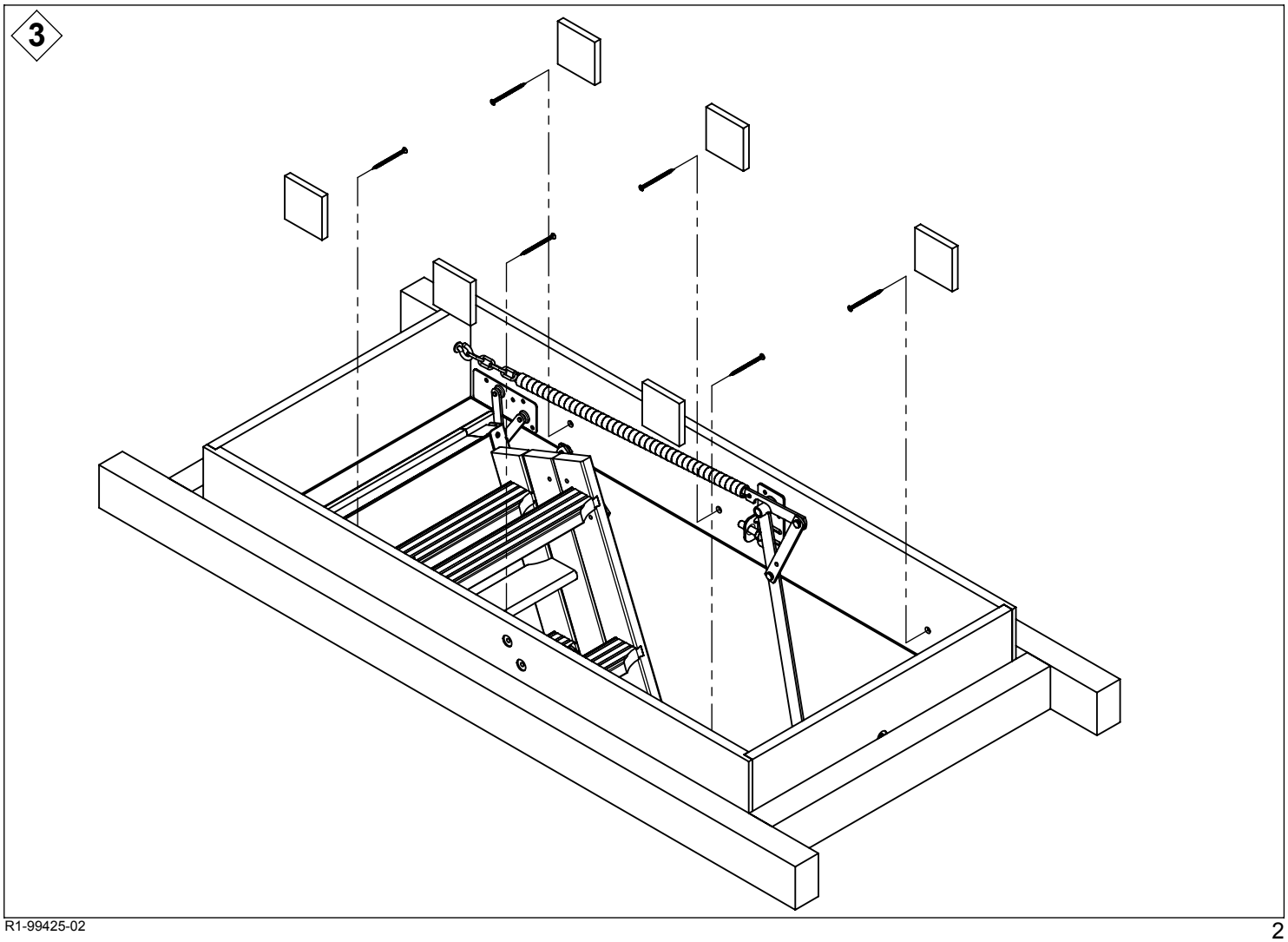
3

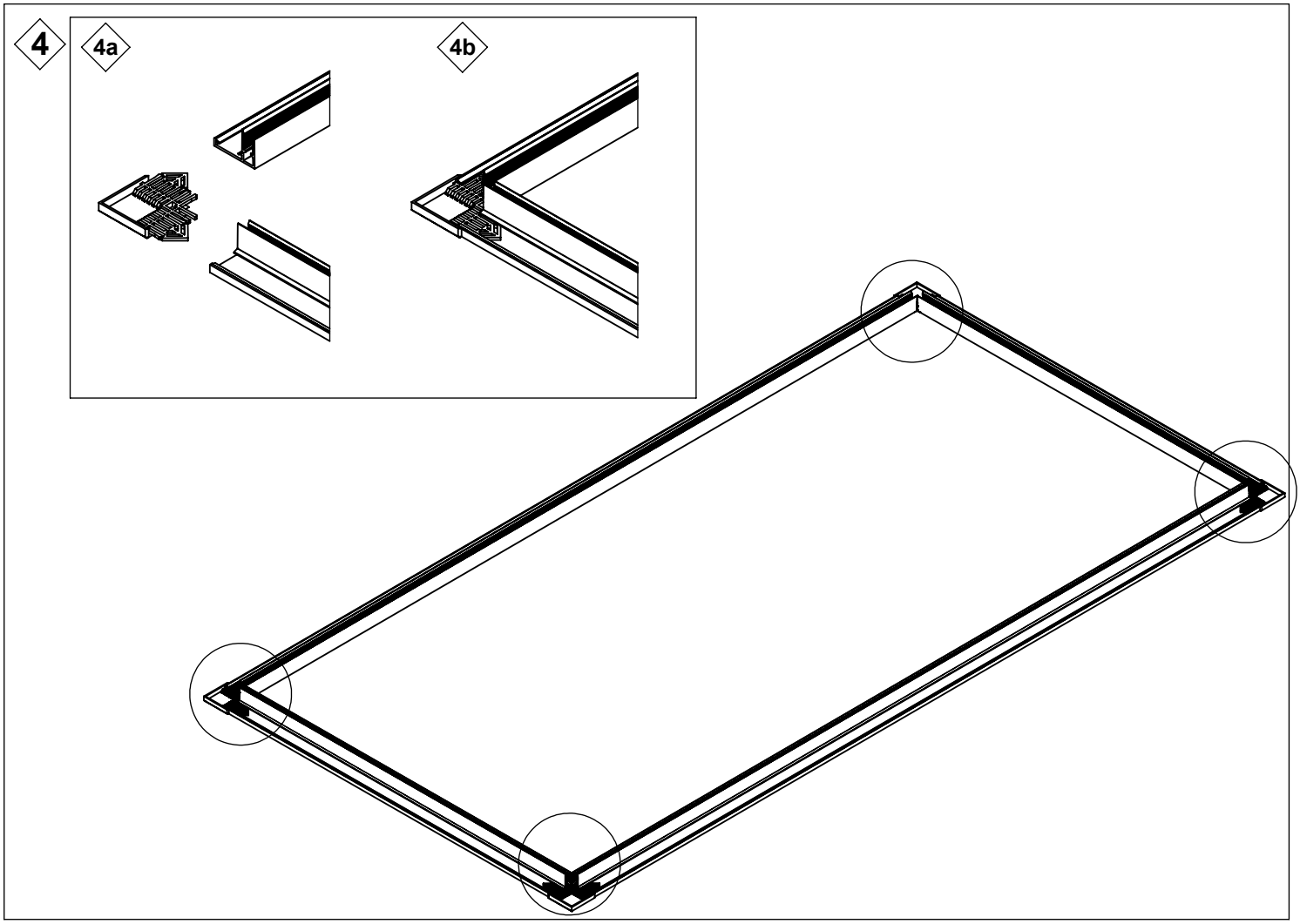
4
4a
4b

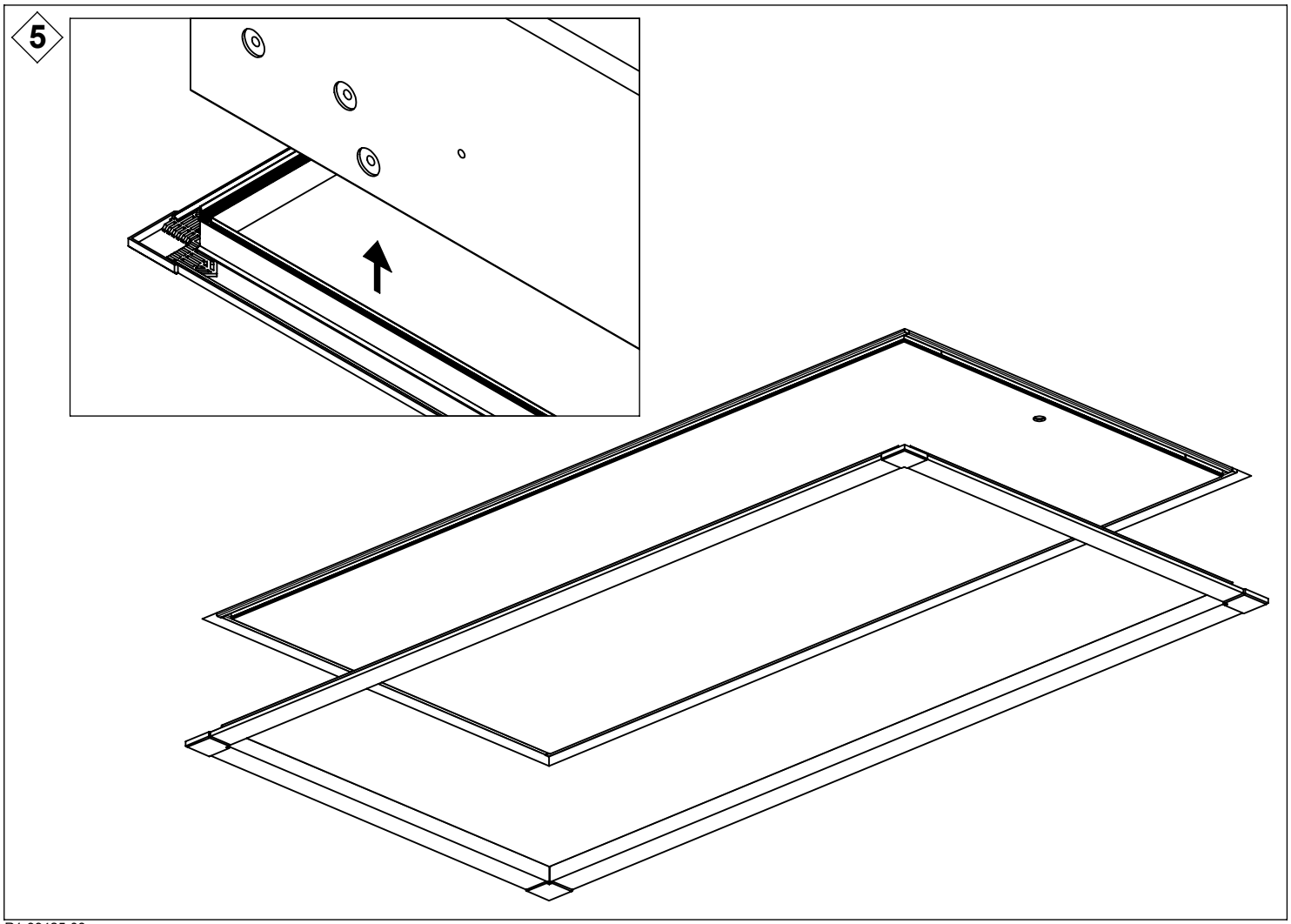
5

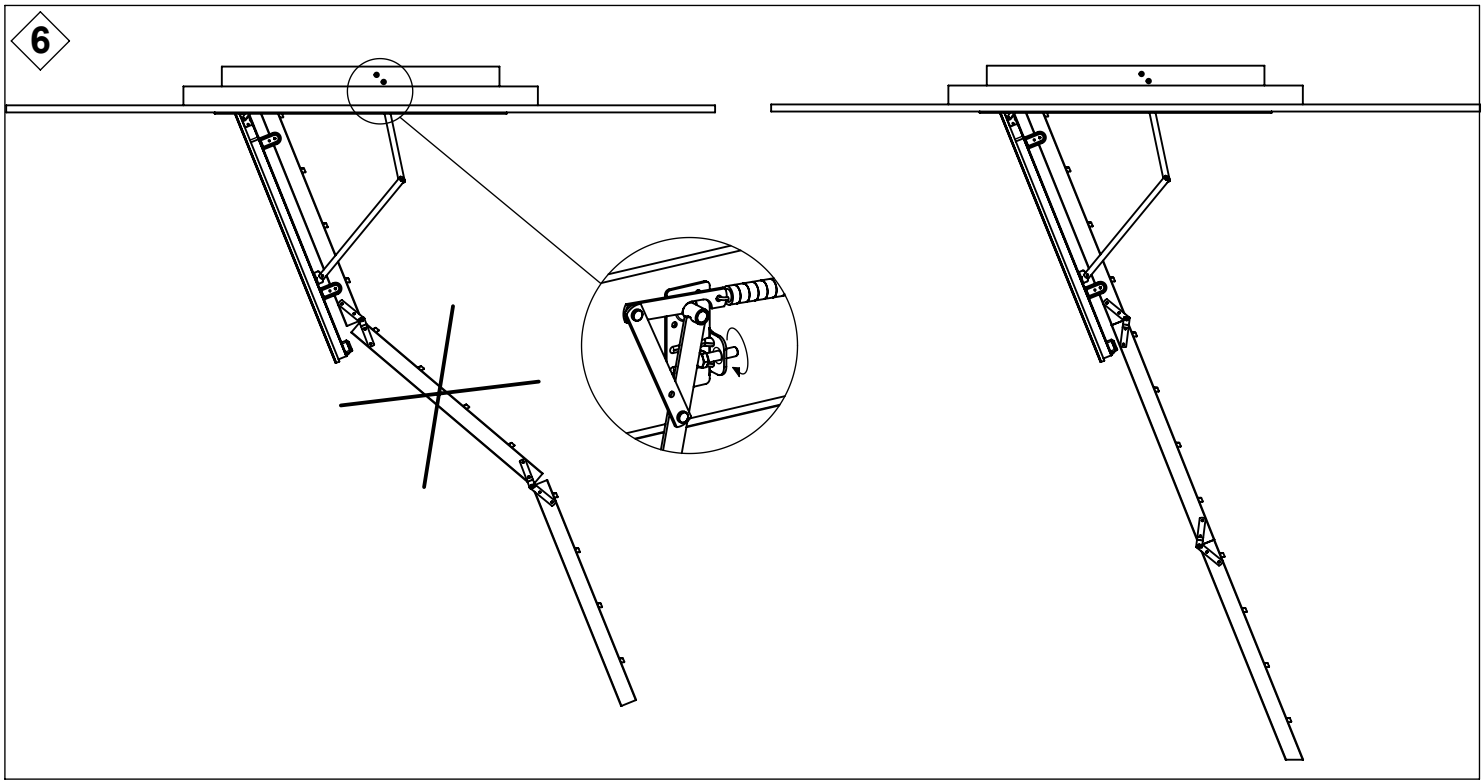
6

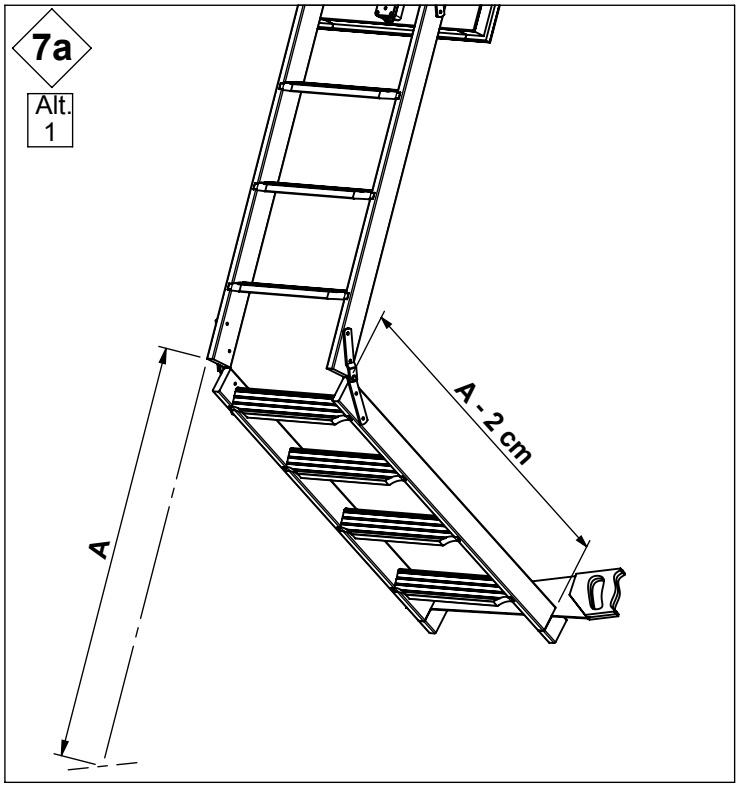
7a
Alt.
1
A
A - 2 cm

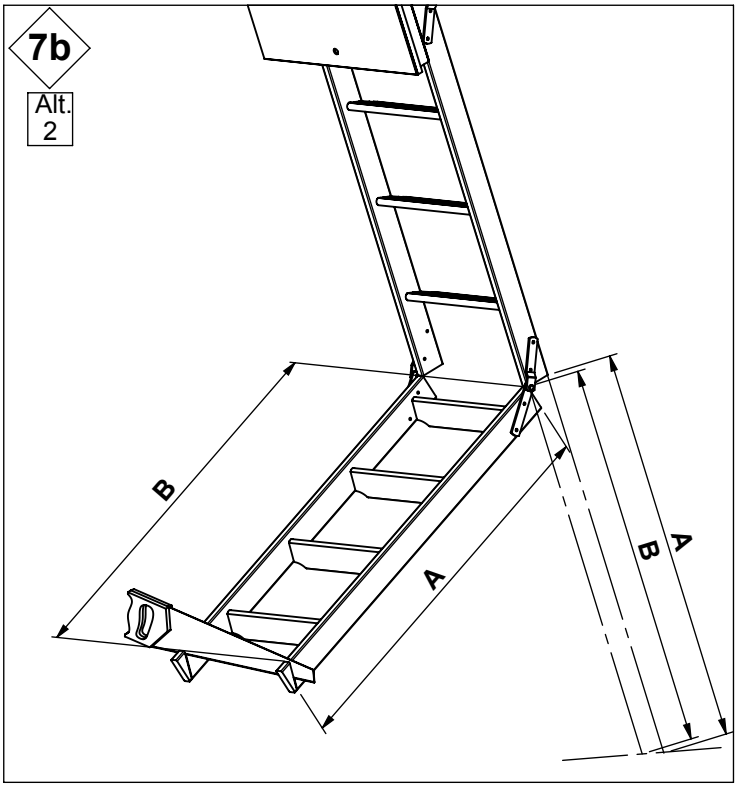
7b
Alt.
2
B
A
B
A

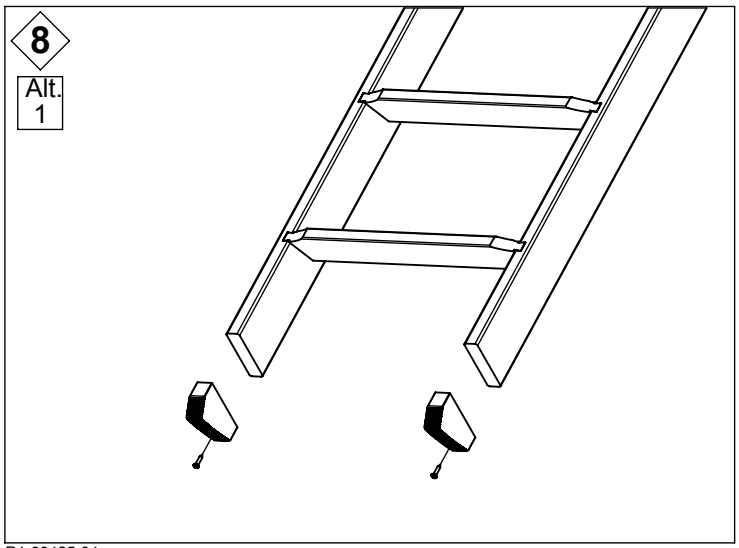
8
Alt.
1